esencia de hostelería
HOSDECORA
www.hosdecora.com Tel: 976 255 991

CITRUS JUICERS Nos. 11 - 38 - 52

USER AND MAINTENANCE MANUAL

IMPORTANT: documents included in this manual to be kept:

- **"CE" COMPLIANCE DECLARATION**
- **WARRANTY CERTIFICATE**

ORIGINAL VERSION

N°11

N°52

N°38

Coffee grinders - Fruit juicers - Mixers - Blenders - Drinks dispensers - Planetary mixers
Cheese graters - Ice crushers - Mincers - Vegetable slicers – Dough mixer
Moulins à café - Presse-fruits - Mixers - Blenders - Distributeurs de boissons - Batteurs mélangeurs - Pétrin - Râpes à fromage - Broyeurs à glaçons - Hache-viande - Coupe-légumes

MODELES DEPOSES FRANCE ET INTERNATIONAL
INTERNATIONALLY PATENTED MODELS

ENG

CONTENTS

“CE” COMPLIANCE DECLARATION 3
IMPORTANT SAFEGUARDS 4
IMPROPER USE....4
ELECTRICAL CONNECTION: 4
USING FOR THE 1st TIME:....4
RECYCLING THE PRODUCT AT THE END OF ITS SERVICE LIFE 5
YOUR CITRUS JUICER Nos. 11- 38 - 52 6
Using the CITRUS JUICER 6
USING:....6
CLEANING:....6
MAINTENANCE 7
Spare parts 7
TROUBLESHOOTING....7
The appliance does not start: 7
The appliance stops due to motor overheating....7
The appliance stops further to an overload: 7
TECHNICAL SPECIFICATIONS 8
ELECTRICAL WIRING DIAGRAMS....9
Wiring diagram 220-240V 50/60Hz 9
Wiring diagram 220-240V 50/60Hz 10
Wiring diagram 100-120V 50/60Hz 11
FIGURES 12
WARRANTY CERTIFICATE 13
APPLIANCE IDENTIFICATION PLATE 13

"CE" COMPLIANCE DECLARATION

THE MANUFACTURER:

SANTOS SAS - 140-150, Av. Roger SALENGRO 69120 VAULX-EN-VELIN (LYON) FRANCE

HEREBY DECLARES THAT THE MACHINE DESIGNATED ON THE IDENTIFICATION PLATE AFFIXED:

- UNDER THE APPLIANCE,
- ON THE WARRANTY CERTIFICATE ON THE LAST PAGE OF THIS MANUAL,

COMPLIES WITH THE PROVISIONS OF THE "machines" DIRECTIVE AS MODIFIED (Directive 98/37/CEI)
AND THE NATIONAL LEGISLATION TRANSPOSING IT.

IT ALSO COMPLIES WITH THE PROVISIONS OF THE FOLLOWING EUROPEAN DIRECTIVES:

No. 73/23 dated 19/02/73 (Low voltage directive)
No. 89/336 (CEM directive)
No. 2002/95/CE (RoHS directive)
No. 2002/96/CE (WEEE directive)

The machine complies with the provisions of the following harmonised European standards:

EN ISO 12100 -1 and 2: 2004 - Machine safety devices - General design principles
EN 60204-1: 2006: Machine safety devices - Machine electrical equipment -General regulations
EN 60335-1: 2002 - Safety of household and similar electrical appliances

SIGNED IN VAULX-EN-VELIN ON: **01/05/07**

SIGNATORY'S TITLE: **CHIEF EXECUTIVE OFFICER**

SIGNATORY'S NAME: **JACQUES FOUQUET**

SIGNATURE

ENG

IMPORTANT SAFEGUARDS

When using, cleaning or maintaining the machine, always follow these instructions:

Read all instructions

Note: You will find it easier to understand the next few paragraphs if you refer to the diagrams at the end of this manual.

IMPROPER USE

1. Do not use this appliance to press any food other than limes, lemons, oranges and grapefruit.
2. The appliance should neither be cleaned in a jet of water nor with a high pressure spray.
3. The base (4) must not be immersed in water.
4. For electrocution risk protection reasons, never plunge the base into water or any other liquid.
5. Unplug the appliance before carrying out any work on it: cleaning, maintenance or repair.
6. The use of spare parts other than certified SANTOS original parts is prohibited.

ELECTRICAL CONNECTION:

The appliance is available in with a choice of two voltages for the power supply

- 220-240V 50/60 Hz single phase
- 110-120V 50/60 Hz single phase

Line protection: the appliance should be connected to a standard 2-pole + earth electric socket. The installation should be fitted with an RCD and a fuse rated at 16A. **The appliance must be earthed**

CARE:

- Before connecting the machine, check that the mains electrical voltage is the same as the voltage for your appliance. Its value is shown:
  - either on the identification plate under the machine.
  - or on the identification plate on the last page of this manual.
- If the power cable (**10**) is damaged, it should be replaced by a special assembly available from approved SANTOS dealers or from SANTOS.

CARE: Make sure that the on / off switch (6) is on **0 position** before plugging the power cord (7) into the mains supply socket (Fig.A).

USING FOR THE 1st TIME:

Carefully clean all parts of the machine in contact with the food (Fig. A).

- Remove the anti-splash dome (8) {model no 52}.
- Remove the cone (1) by pulling it upwards.
- Remove the bowl (2), the pulp grating (9) {model no 52} and the trim (3) {model nos. 11 and 38}.
- Wash the parts with a standard washing up liquid or in the dishwasher.

RECYCLING THE PRODUCT AT THE END OF ITS SERVICE LIFE

This equipment is marked with the selective sorting symbol relating to wastes from electrical and electronic equipment. It signifies that this product should be taken over by a selective collection system conforming to the Guideline 2002/96/EC (WEEE) – part Professional Equipment – so that it can be either recycled or dismantled in order to reduce any impact on the environment.

For more information, please contact your Retailer or the SANTOS.

For eliminating or recycling components of equipment, please contact a specialized company or contact SANTOS.

The electronic products not undergoing a selective sorting are potentially dangerous for the environment.

The damaging materials should be eliminated or recycled according to the regulations in force.

ENG

YOUR CITRUS JUICER Nos. 11- 38 - 52

- Citrus juicers nos. 11 – 38 – 52 are especially designed for bars, cafés, hotels, restaurants, cocktail bars, institutions, fresh fruit juice bars, etc.
- The appliances nos. 11 and 38 are comprised of an aluminum motor unit, a juice bowl and 3 engineered plastic pressing cones (2 pressing cones for model N°38).
- The appliance no. 52 is comprised of an aluminum motor unit, a powerful motor for intensive use, a stainless steel bowl, 3 plastic pressing cones and a plastic anti-splash dome.
- Citrus juicers nos. 11 – 38 – 52 are designed to press limes, lemons, oranges or grapefruit.
- They are ideal for preparing: fresh lemon, orange or grapefruit juice or as a basis for preparing fruit cocktails.

Using the CITRUS JUICER

USING:

Caution: the fruits used must be washed carefully before being pressed.

Assembly and preparation:

1. Place the trim (3) on the bowl (2) {models nos. 11 and 38}.
2. Place the bowl (2) on the base (4).
3. Place the pulp grating (9) in the bowl.
4. Place the cone (1) on the motor shaft (5).
5. Place the anti-splash dome (8) on the bowl (2) {model no 52}.
6. Cut the citrus fruit in two halves.
7. Place a glass level with the spout on the bowl (2).
8. Start the appliance by putting the On / Off switch (6) on "1".
9. Press the citrus fruit halves one after the other.
10. When you have finished using it, stop the appliance by putting the On / Off switch (6) on "0".

CLEANING:

IMPORTANT :

- **In every case, stop the appliance and unplug the appliance's power cord (7).**

It is recommended to clean the appliance as soon as you have finished using it.
Cleaning will be easier if you do not wait until the pulp has dried in the bowl (2), on the anti-splash dome (8), the cone (1) or the pulp grating (9).
The base (4) is to be cleaned with a soft damp sponge, then dried.

MAINTENANCE

Before any servicing of the appliance, it is essential to unplug the appliance from the mains supply (7).

This machine requires no particular maintenance because the bearings are lubricated for life.
If servicing is necessary to replace any parts such as the electrical components or any others, refer to the list of components (see the exploded view at the end of the manual).

Spare parts

IMPORTANT: Use of spare parts other than certified original SANTOS parts is prohibited

For **all spare part orders** (see references in the exploded view at the end of the manual), state:

- **the type,**
- **the machine serial number and**
- **the electrical specifications** (**16**)

recorded under the machine.

TROUBLESHOOTING

Identifying the cause of appliance stoppage precisely.

The appliance does not start:

- Check: the mains supply, the condition of the power cord (7).

The appliance stops due to motor overheating: (the motor unit is hot)

The motor is protected by a built-in thermal cutout. In the event of overheating, the motor stops.

- Set the On / Off switch (6) to **0** position, disconnect the plug (7).
- Wait until the motor cools down (20 to 45 minutes), reconnect the plug (7) then press the On / Off switch (6) (position 1).

If the problem persists, switch off the power supply to the appliance (unplug the cord from the mains socket (7)) and call in the maintenance service or contact a SANTOS-approved dealer.

The appliance stops further to an overload:

If the motor stalls (due to excessive pressing), it can heat very quickly and stops by overload protection.

TECHNICAL SPECIFICATIONS

Model		**N° 11**	**N° 38**	**N° 52**
Supply voltage Frequency	.(V) (Hz)	220-240 100-120 50/60 50/60	220-240 100-120 50/60 50/60	220-240 100-120 50/60 50/60
Motor: Nominal Power input Speed :	 (W) (rpm) (rpm)	 130 155 1450 to 50Hz 1700 to 60Hz	 130 155 1450 to 50Hz 1700 to 60Hz	 230 260 1450 to 50Hz 1700 to 60Hz
Dimensions : Height Width Depth Clearance height beneath the spout	(mm) (mm) (mm) (mm)	350 200 300 125	350 200 300 135	480 230 300 200
Weight: Net weight Packaged weight	(kg) (kg)	5 5.6	5 5.6	10 11
Noise: (2)	(dBA)	65	65	65

(1) These ratings are provided as a rough guide. The exact electrical specifications can be found on the rating plate.

(2) Noise level measured in sound pressure appliance in operation 1 m from its axis in accordance with standard EN 31201.

MARK	Description
1	Pressing cone
2	Bowl
3	Trim
4	Base
5	Motor shaft
6	On / off switch
7	Plug / power supply cord
8	Anti-splash dome
9	Pulp grating

ENG

ELECTRICAL WIRING DIAGRAMS

Models nos. 11 and 38:

Wiring diagram 220-240V 50/60Hz

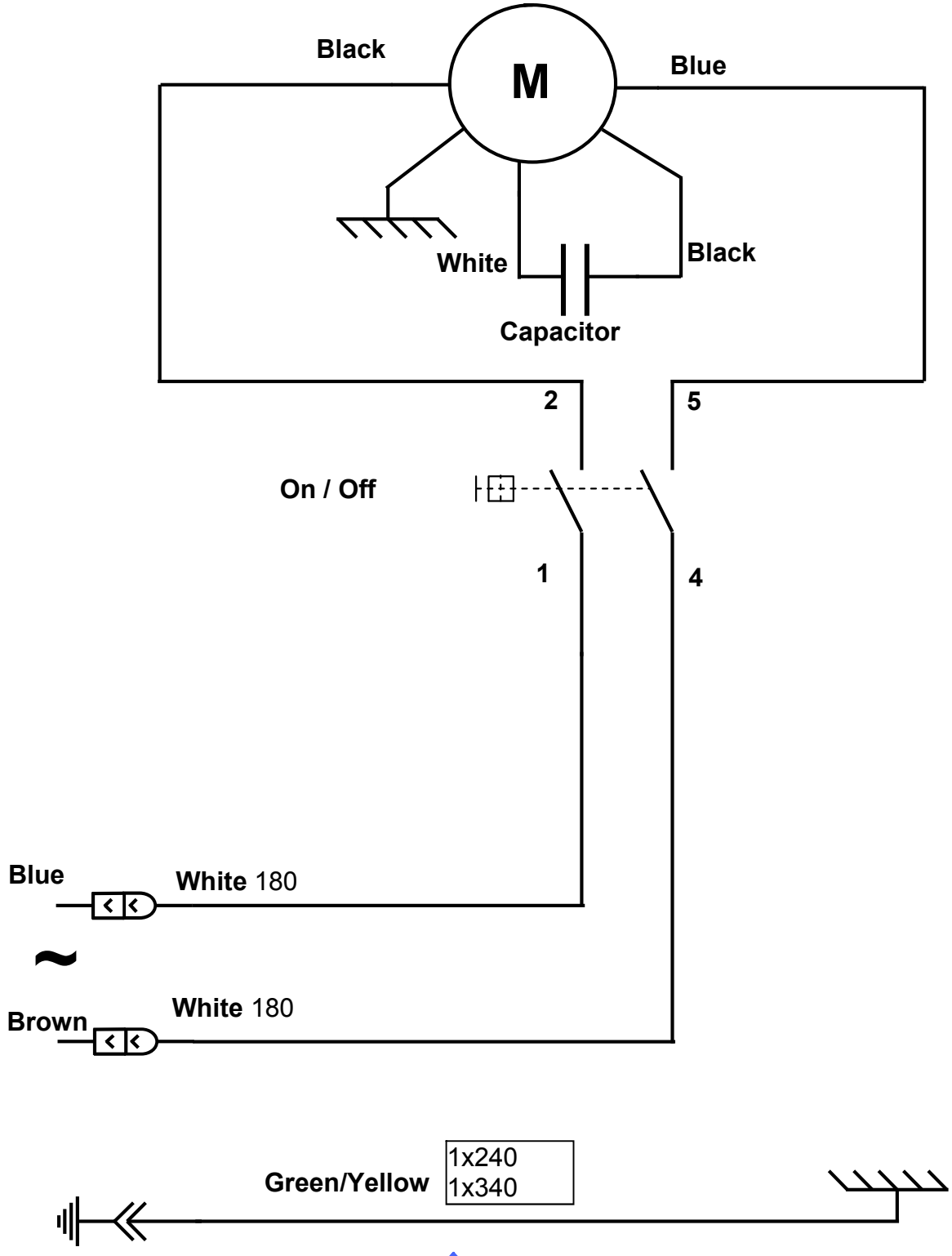

ENG

Model no 52:

Wiring diagram 220-240V 50/60Hz

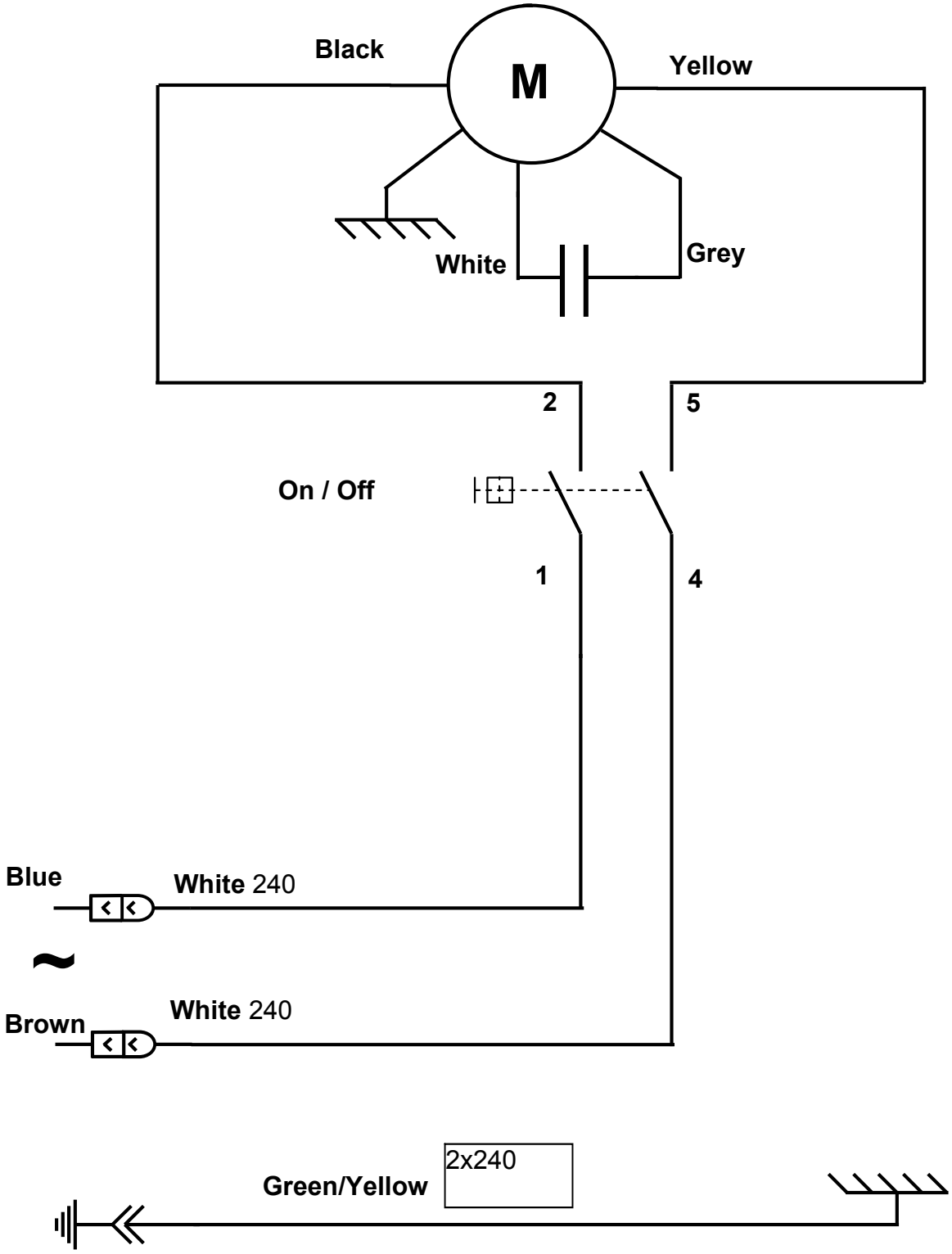

ENG

Models nos. 11, 38 and 52:

Wiring diagram 100-120V 50/60Hz

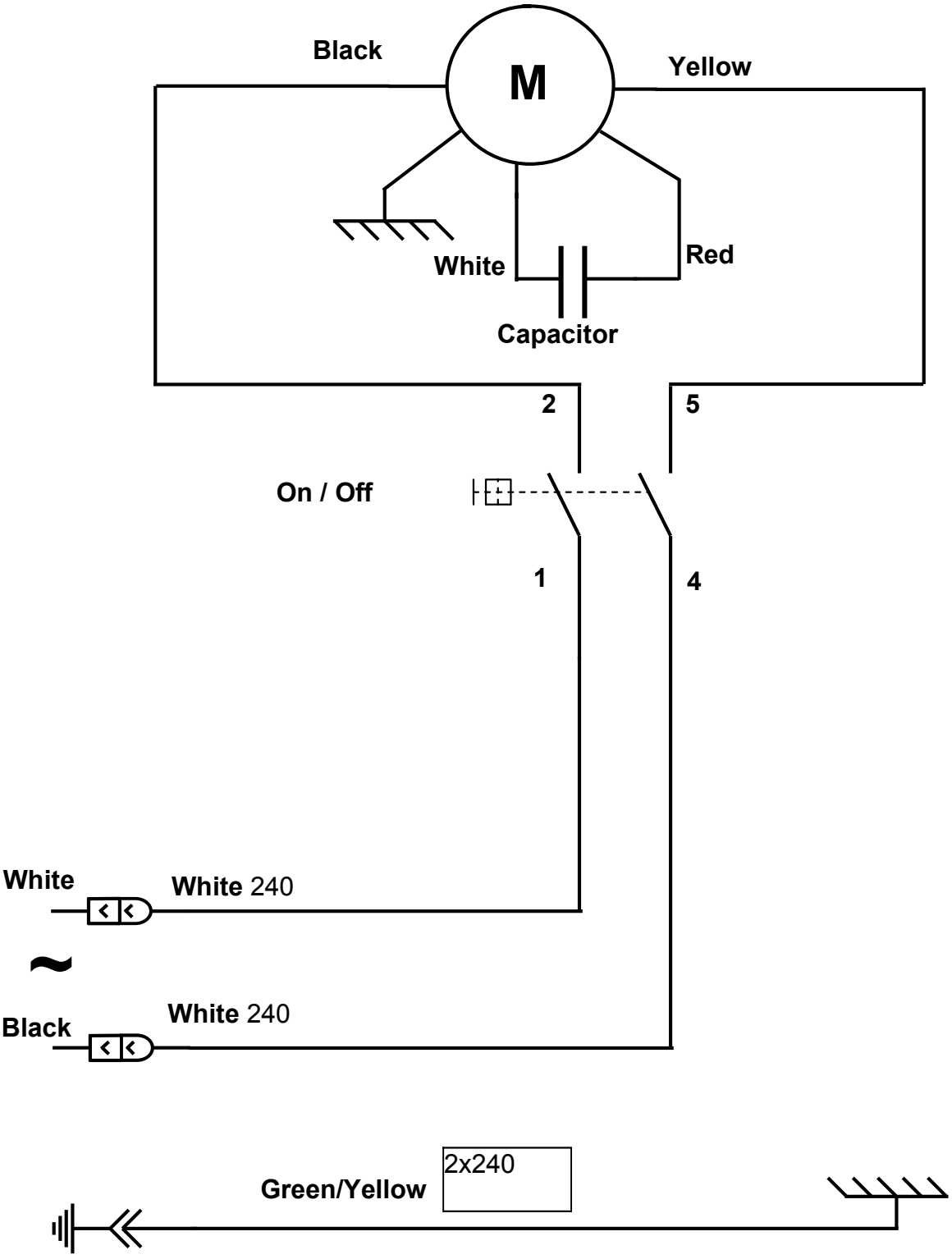

Model N°11
or
Model N°38

Fig. A

Model N°52

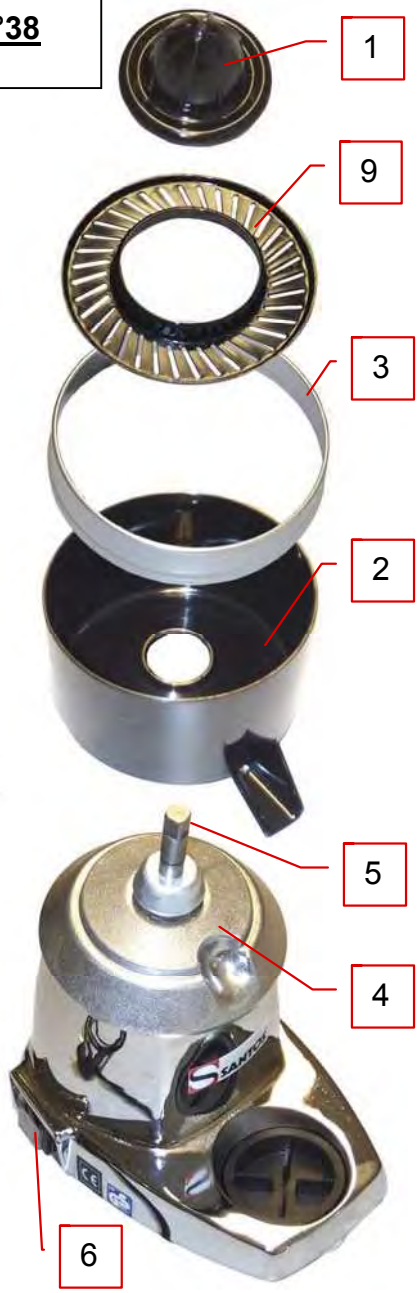

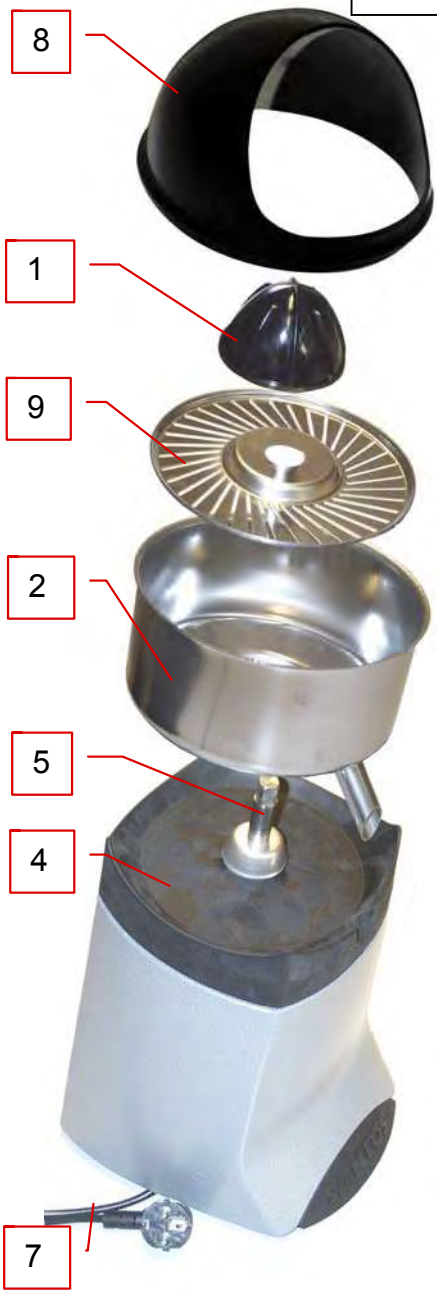

WARRANTY CERTIFICATE

WARRANTY

This appliance is guaranteed for twelve months from the date of manufacture appearing on the identification plate.

The guarantee is strictly limited to the free replacement of any original part acknowledged by us as being defective as a result of a fault or a manufacturing defect and identified as belonging to the appliance in question.

It does nor apply to damage resulting from an installation or use which does not comply with the instructions supplied with each appliance (user manual) or in the event of an obvious lack of maintenance or non-observance of basic electrical safety rules.

All part replacements under warranty are made after return of the defective part to our workshops carriage paid, accompanied by a copy of this warranty certificate on which the serial number of the appliance is shown.

All appliances have an identification plate bearing a serial number identical to that on this warranty certificate.

In the event of serious damage which is deemed only to be repairable in our workshops, and after agreement from our services, all appliances under warranty are to be dispatched by the client carriage paid. If the appliance is repaired outside the warranty, the forwarding and return transport is the responsibility of the client. Parts and labour are invoiced at the prices in force (spare parts price - hourly labour cost). All repairs will be subject to a prior estimate which should be agreed before repair.

In the event of a dispute, the Courts for the manufacturer's area (Lyon) alone have jurisdiction.

APPLIANCE IDENTIFICATION PLATE

SPECIMEN
For all documents not supplied with the appliance.

Printed, Faxed and Downloaded

esencia de hostelería
HOSDECORA
www.hosdecora.com Tel: 976 255 991