esencia de hostelería
HOSDECORA
www.hosdecora.com Tel: 976 255 991

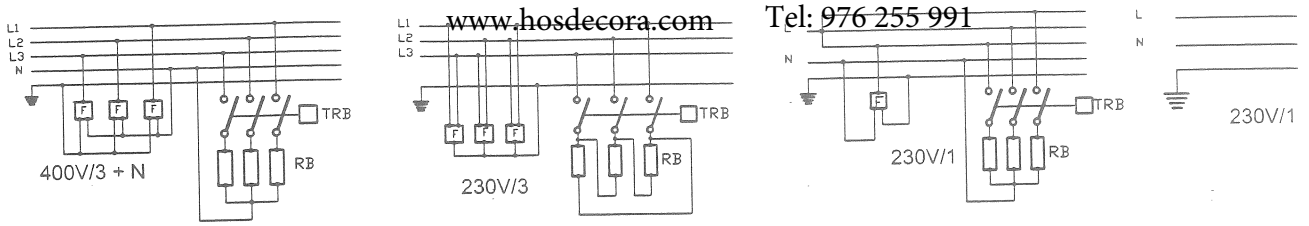

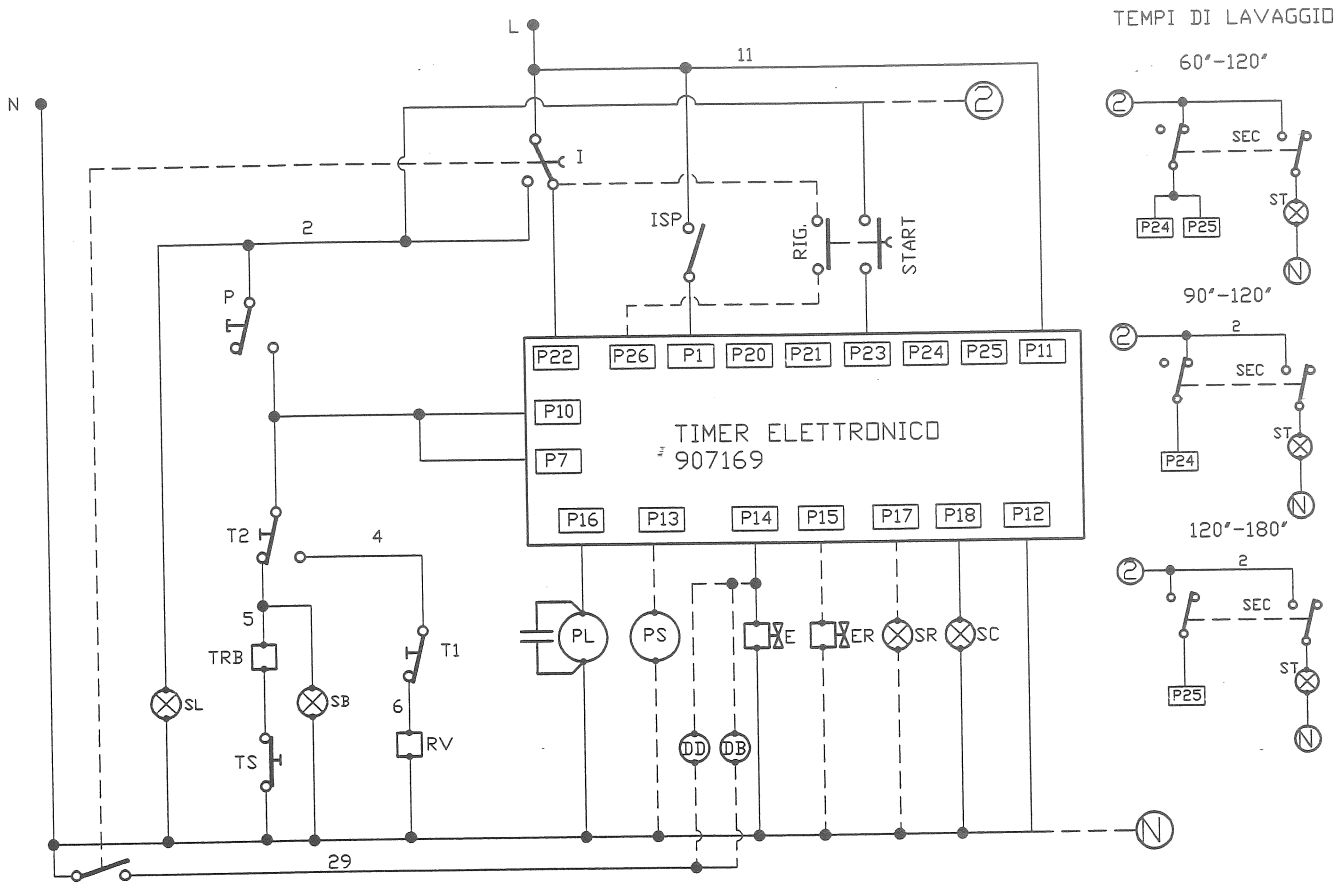

	I	GB	F	D	E
DB	DOSATORE BRILLANTANTE	RINSE-AID METERING UNIT	DOSEUR LIQUIDE DE RINCAGE	KLARSPULER-DOSIERER	DOSIFICADOR ABRILLANTADOR
DD	DOSATORE DETERGENTE	DETERGENT METERING UNIT	DOSEUR PRODUIT DE LAVAGE	SPULMITTEL-DOSIERER	DOSIFICADOR DETERGENTE
E	ELETTROVALVOLA RISCIACQUO	RINSING SOLENOID VALVE	ELECTROVANNE RINCAGE	MAGNETVENTIL SPULEN	ELECTROVALVULA ENJAGUE
ER	ELETTROVALVOLA RIGENERAZIONE	REGENERATION SOLENOID VALVE	ELECTROVANNE REGENERATION	MAGNETVENTIL REGENER.	ELECTROVALVULA REGENERACION
F	FILTRI ANTIDISTURBO	ANTI - JAMMING FILTERS	FILTRE ANTI-DERANGEMENT	ANTISTORUNGSFILTER	FILTROSACUSTICOS
I	INTERRUTTORE GENERALE	MASTER SWITCH	INTERRUPTEUR GENERAL	ALLGEMEINER SCHAIL TER	INTERRUPTOR GENERAL
ISP	INTERRUTTORE SICUREZZA PORTA	DOOR SAFETY DEVICE	SECURITE' PORTE	SICHERHEITSVORRICHTUNG TUR	SEGURIDAD PUERTA
P	PRESSOSTATO VASCA	TANK PRESSURE SWITCH	PRESSOSTAT CUVE	DRUCKMESSER WANNE	PRESOSTATO CUBA
PL	POMPA LAVAGGIO	WASH PUMP	POMPE LAVAGE	POMPE WASCHUNG	BOMBA DE LAVADO
PS	POMPA SCARICO	DISCHARGE PUMP	POMPE D'EVACUATION	PUMPE AUSLASS	BOMBA DE DESCARA
RB	RESISTENZA BOILER	BOILER RESISTANCE	RESISTANCE CHAUFFE-EAU	WIDERSTAND BOILER	RESISTENCIA BOILER
RIG.	PULSANTE RIGENERAZIONE				
RV	RESISTENZA VASCA	TANK RESISTANCE	RESISTANCE CUVE	WIDERSTAND WANNE	RESISTENCIA CUBA
SB	SPIA BOILER	BOILER PILOT LIGHT	LAMPE-TEMOIN CHAUFFE-EAU	KONTROLLEUCHTE BOILER	TESTIGUO BOILER
SC	SPIA CICLO	CYCLE PILOT LIGHT	LAMPE-TEMOIN CYCLE	KONTROLLEUCHTE ZIKLUS	TESTIGO CICLO
SL	SPIA LINEA	POWER PILOT LIGHT	LAMPE-TEMOIN LIGNE	KONTROLLEUCHTE LINIE	TESTIGO LINEA
SR	SPIA RIGENERAZIONE	REGENERATION PILOT LIGHT	LAMPE-TEMOIN REGENERATION	KONTROLL REGENERIERERVORGANG	TESTIGO REGENERACION
START	PULSANTE CICLO	CYCLE BUTTON	BOUTON CYCLE	DRUCKNESSER ZYKLUS	BOTON CICLO
T1	TERMOSTATO VASCA	TANK THERMOSTAT	THERMOSTAT CUVE	THERMOSTAT WANNE	TERMOSTATO CUBA
T2	TERMOSTATO BOILER	BOILER THERMOSTAT	THERMOSTAT CHAUFFE-EAU	THERMOSTAT BOILER	TERMOSTATO BOILER
TRB	TELERUTTORE RESISTENZA BOILER	CONTROL SWITCH CONTACT	BOBINE TELERUPTEUR CHAUFFE-EAU	KONTAKT FERNSCHALTER BOILER	CONT. TELERRUPTOR BOILER
TS	TERMOSTATO SICUREZZA	SAFETY DEVICE THERMOSTAT	THERMOSTAT DE SECURITE'	THERMOSTAT SICHERHEILT	TERMOSTATO SEGURIDAD

CODICE	SE0124	DATA INIZIO	GIUGNO 2011'	DATA FINE	--	FRONTALI + (RIGENERAZIONE+PS+DB+DD OPTIONAL) 120'

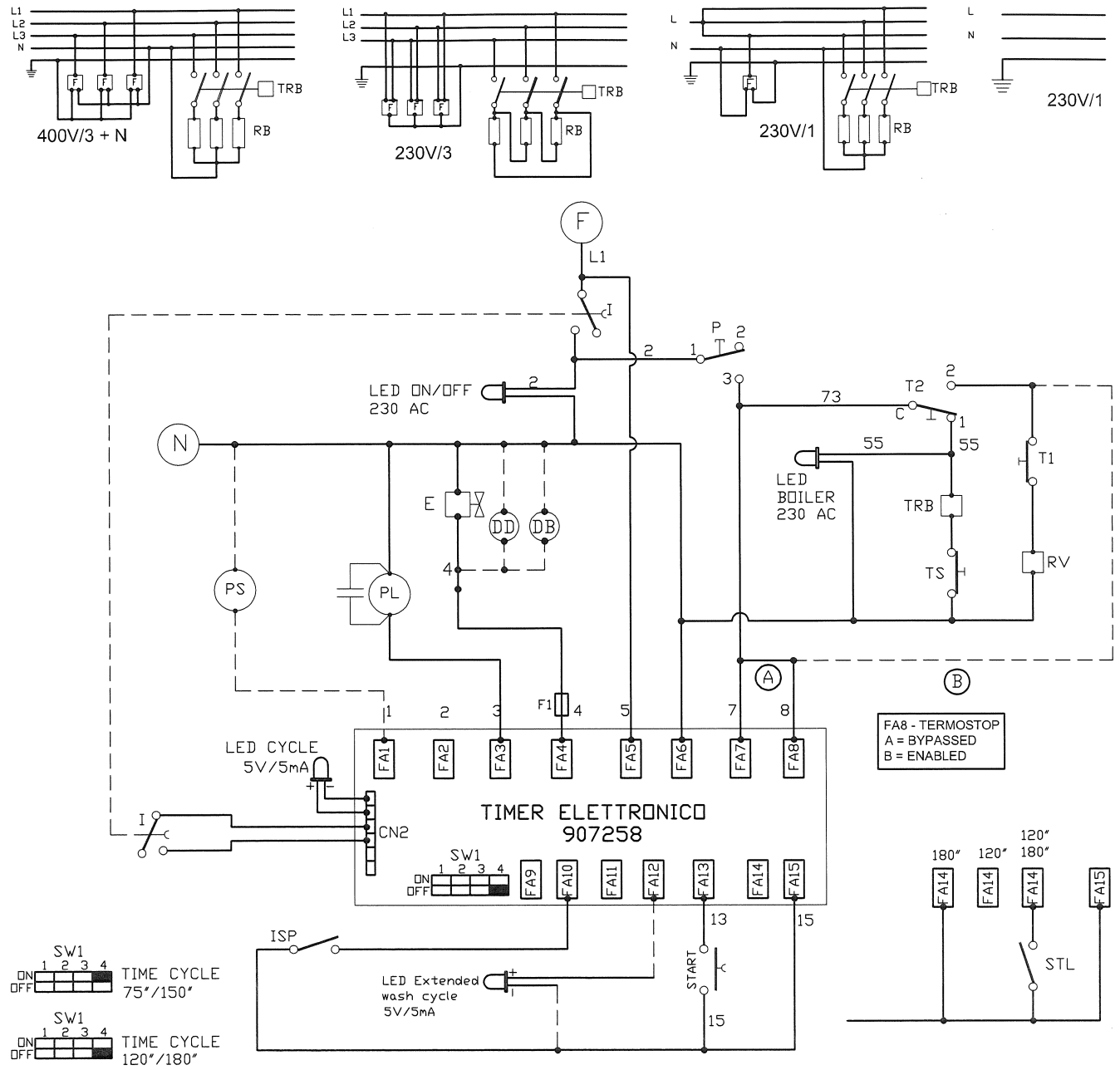

	I	GB	F	D	E
DB	DOSATORE BRILLANTANTE	RINSE-AID METERING UNIT	DOSEUR LIQUIDE DE RINCAGE	KLARSPULER-DOSIERER	DOSIFICADOR ABRILLANTADOR
DD	DOSATORE DETERGENTE	DETERGENT METERING UNIT	DOSEUR PRODUIT DE LAVAGE	SPULMITTEL-DOSIERER	DOSIFICADOR DETERGENTE
E	ELETTROVALVOLA RISCIACQUO	RINSING SOLENOID VALVE	ELECTROVANNE RINCAGE	MAGNETVENTIL SPULEN	ELECTROVALVULA ENJAGUE
F	FILTRI ANTIDISTURBO	ANTI - JAMMING FILTERS	FILTRE ANTI-DERANGEMENT	ANTISTORUNGSFILTER	FILTROSACUSTICOS
I	INTERRUTTORE GENERALE	MASTER SWITCH	INTERRUPTEUR GENERAL	ALLGEMEINER SCHAIL TER	INTERRUPTOR GENERAL
ISP	INTERRUTTORE SICUREZZA PORTA	DOOR SAFETY DEVICE	SECURITE' PORTE	SICHERHEITSVORRICHTUNG TUR	SEGURIDAD PUERTA
P	PRESSOSTATO VASCA	TANK PRESSURE SWITCH	PRESSOSTAT CUVE	DRUCKMESSER WANNE	PRESOSTATO CUBA
PL	POMPA LAVAGGIO	WASH PUMP	POMPE LAVAGE	POMPE WASCHUNG	BOMBA DE LAVADO
PS	POMPA SCARICO	DISCHARGE PUMP	POMPE D'EVACUATION	PUMPE AUSLASS	BOMBA DE DESCARA
RB	RESISTENZA BOILER	BOILER RESISTANCE	RESISTANCE CHAUFFE-EAU	WIDERSTAND BOILER	RESISTENCIA BOILER
RV	RESISTENZA VASCA	TANK RESISTANCE	RESISTANCE CUVE	WIDERSTAND WANNE	RESISTENCIA CUBA
LB	LED BOILER	BOILER LED			
LC	LED CICLO	CYCLE LED			
LL	LED LINEA	POWER LED			
START	PULSANTE CICLO	CYCLE BUTTON	BOUTON CYCLE	DRUCKNESSER ZYKLUS	BOTON CICLO
STL	SELETTORE TEMPI LAVAGGIO				
T1	TERMOSTATO VASCA	TANK THERMOSTAT	THERMOSTAT CUVE	THERMOSTAT WANNE	TERMOSTATO CUBA
T2	TERMOSTATO BOILER	BOILER THERMOSTAT	THERMOSTAT CHAUFFE-EAU	THERMOSTAT BOILER	TERMOSTATO BOILER
TRB	TELERUTTORE RESISTENZA BOILER	CONTROL SWITCH CONTACT	BOBINE TELERUPTEUR CHAUFFE-EAU	KONTAKT FERNSCHALTER BOILER	CONT. TELERRUPTOR BOILER
TS	TERMOSTATO SICUREZZA	SAFETY DEVICE THERMOSTAT	THERMOSTAT DE SECURITE'	THERMOSTAT SICHERHEILT	TERMOSTATO SEGURIDAD

CODICE	SE0173	DATA INIZIO	LUGLIO 2013	DATA FINE	--	FRONTALI GRANDI SCHEDA 907258

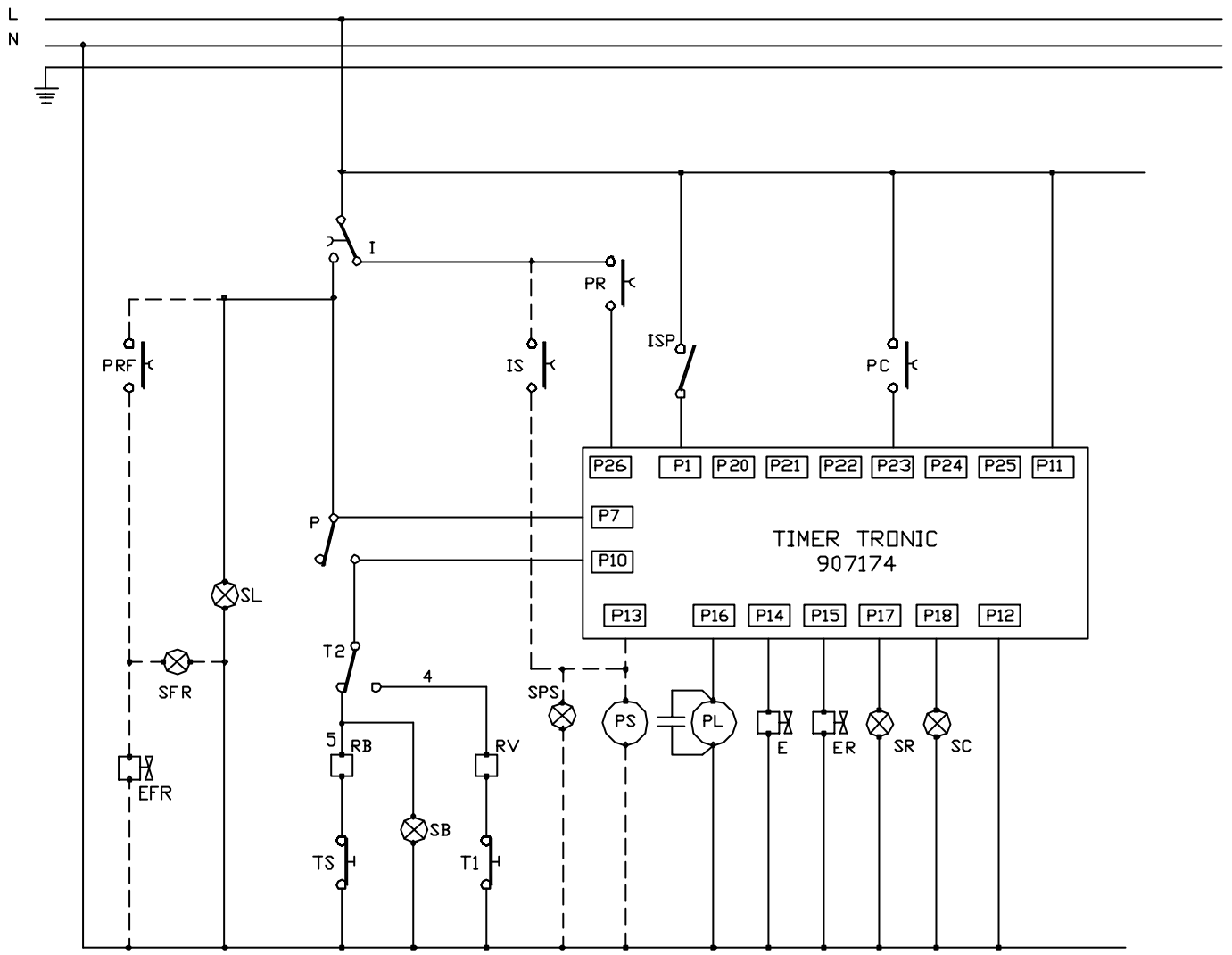

	I	GB	F	D	E
E	ELETTROVALVOLA RISCIACQUO	RINSING SOLENOID VALVE	ELECTROVANNE RINCAGE	MAGNETVENTIL SPULEN	ELECTROVALVULA ENJAGUE
EFR	ELETTROVALVOLA RISC. FREDDO	COLD RINSING SOLENOID VALVE	ELECTROVANNE RINCAGE FROID	MAGNETVENTIL KALTSPULEN	ELECTROVALVULA ENJAGUE EN FRIO
ER	ELETTROVALVOLA RIGENERAZIONE	REGENERATION SOLENOID VALVE	ELECTROVANNE REGENERATION	MAGNETVENTIL REGENER.	ELECTROVALVULA REGENERACION
I	INTERRUTTORE GENERALE	MASTER SWITCH	INTERRUPTEUR GENERAL	ALLGEMEINER SCHAIL TER	INTERRUPTOR GENERAL
IS	PULSANTE SCARICO	DISCHARGE BUTTON	BOUTON D'EVACUATION	TASTE AUSLASS	BOTON DE DESCARA
ISP	INTERRUTTORE SICUREZZA PORTA	DOOR SAFETY DEVICE	SECURITE' PORTE	SICHERHEITSVORRICHTUNG TUR	SEGURIDAD PUERTA
P	PRESSOSTATO VASCA	TANK PRESSURE SWITCH	PRESSOSTAT CUVE	DRUCKMESSER WANNE	PRESOSTATO CUBA
PC	PULSANTE CICLO	CYCLE BUTTON	BOUTON CYCLE	DRUCKNESSER ZYKLUS	BOTON CICLO
PFR	PULSANTE RISCIACQUO FREDDO	COLD RINSING BUTTON	BOUTON RINCAGE FROID	TASTE KALTSPULEN	BOTON ENJAGUE EN FRIO
PL	POMPA LAVAGGIO	WASH PUMP	POMPE LAVAGE	POMPE VASCHUNG	BOMBA DE LAVADO
PR	PULSANTE RIGENERAZIONE	REGENERATION BUTTON	BOUTON REGENERATION	TASTE REGENERIERVORGANG	BOTON REGENERACION
PS	POMPA SCARICO	DISCHARGE PUMP	POMPE D'EVACUATION	PUMPE AUSLASS	BOMBA DE DESCARA
RB	RESISTENZA BOILER	BOILER RESISTANCE	RESISTANCE CHAUFFE-EAU	WIDERSTAND BOILER	RESISTENCIA BOILER
RV	RESISTENZA VASCA	TANK RESISTANCE	RESISTANCE CUVE	WIDERSTAND WANNE	RESISTENCIA CUBA
SB	SPIA BOILER	BOILER PILOT LIGHT	LAMPE-TEMOIN CHAUFFE-EAU	KONTROLLEUCHTE BOILER	TESTIGUO BOILER
SC	SPIA CICLO	CYCLE PILOT LIGHT	LAMPE-TEMOIN CYCLE	KONTROLLEUCHTE ZIKLUS	TESTIGO CICLO
SFR	SPIA RISCIACQUO FREDDO	COLD RINSING PILOT LIGHT	LAMPE-TEMOIN RINCAGE FROID	KONTROLLEUCHTE KALTSPULEN	TESTIGO ENJAGUE EN FRIO
SL	SPIA LINEA	POWER PILOT LIGHT	LAMPE-TEMOIN LIGNE	KONTROLLEUCHTE LINIE	TESTIGO LINEA
SPS	SPIA POMPA SCARICO				
SR	SPIA RIGENERAZIONE	REGENERATION PILOT LIGHT	LAMPE-TEMOIN REGENERATION	KONTROLL REGENERIERERVORGANG	TESTIGO REGENERACION
T1	TERMOSTATO VASCA	TANK THERMOSTAT	THERMOSTAT CUVE	THERMOSTAT WANNE	TERMOSTATO CUBA
T2	TERMOSTATO BOILER	BOILER THERMOSTAT	THERMOSTAT CHAUFFE-EAU	THERMOSTAT BOILER	TERMOSTATO BOILER
TS	TERMOSTATO SICUREZZA	SAFETY DEVICE THERMOSTAT	THERMOSTAT DE SECURITE'	THERMOSTAT SICHERHEILT	TERMOSTATO SEGURIDAD

020/024/030 A PS - N19/N22/N27/R20/R23/R29 A PS RF CON TIMER ELETTRONICO 120"